WEBSTER INDUSTRIES

HEAVY INDUSTRY CHAINS

ENGINEERED TO EXCEL

MADE in the USA

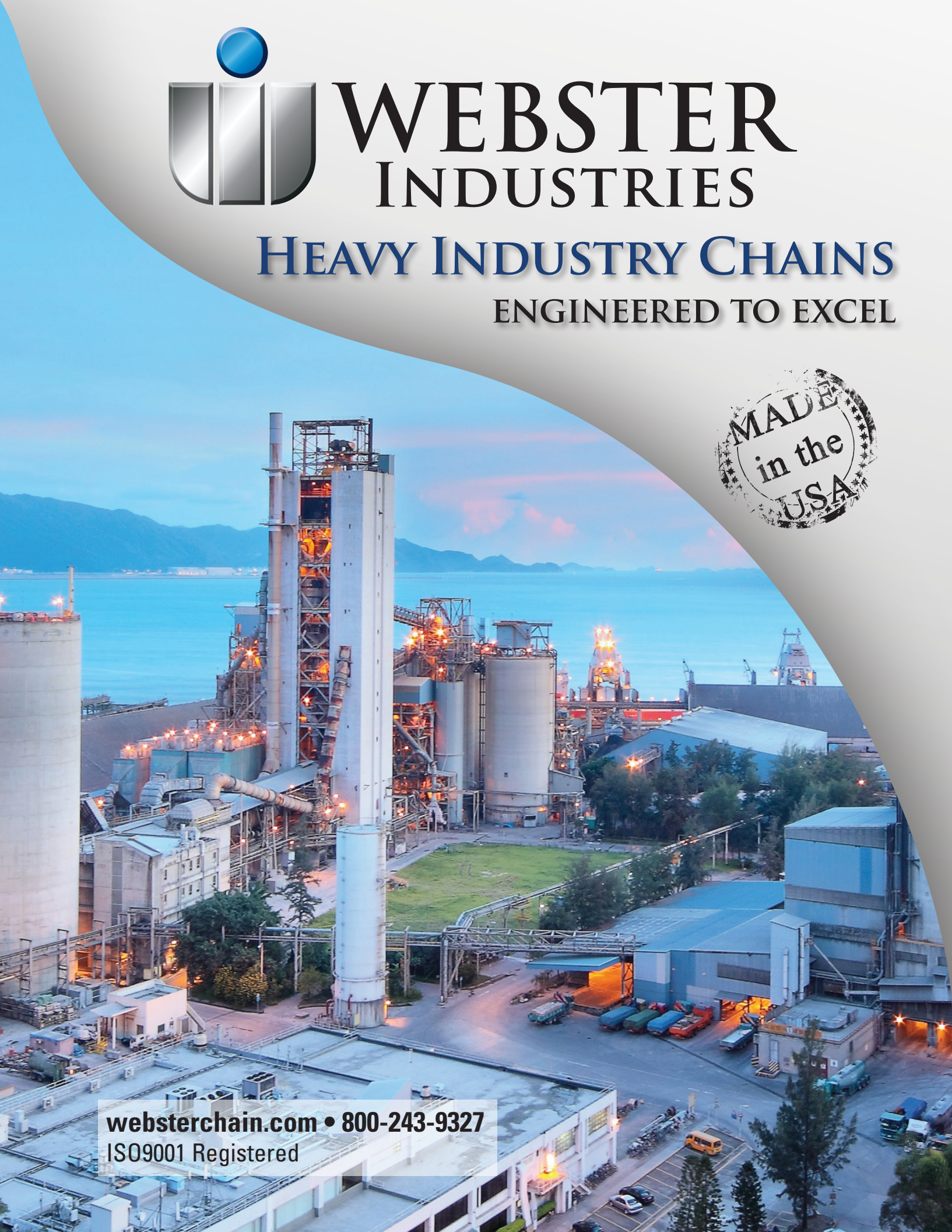

websterchain.com • 800-243-9327

ISO9001 Registered

HISTORY

For over 100 years, Webster Industries, Inc., has provided conveying solutions to a diverse range of markets with our extensive variety of products and industry expertise. Towner K. Webster founded Webster in 1876 in Chicago, Illinois, with his "Common Sense" elevator bucket. In 1907, Webster relocated to Tiffin, Ohio, where our corporate headquarters is located today. Throughout the past century, Webster has evolved from producing elevator buckets to being the world's leading manufacturer of engineered class chains, commercial castings and vibrating conveyors. Webster's reputation for high-quality products is rooted in a tradition of manufacturing excellence that is based on American materials, American labor and American pride.

LOCATIONS

Our Tiffin headquarters has more than 350,000 square feet of manufacturing space, including a malleable iron foundry, punching & stamping operation, machine shop, heat treat facility, chain assembly area and metal fabrication department. Our two warehousing and assembly locations, located in Meridian, Mississippi and Portland, Oregon, allow for quick access to over $7 million of inventory and our three manufacturing facilities stock over 250,000 feet of chain to quickly meet our customers' needs.

VERTICAL INTEGRATION

While many companies rely increasingly on outsourcing for production needs, Webster Industries has invested in building, maintaining and growing a vertically integrated manufacturing system. With full services under one roof at our Tiffin, Ohio, headquarters, Webster offers superior product design, consistent product quality and the best delivery time in the industry.

FOUNDRY

PUNCHING & STAMPING

MACHINING

HEAT TREAT

CHAIN ASSEMBLY

METAL FABRICATION

Hole Processing Advantages

Webster Industries utilizes a variety of manufacturing processes to ensure the highest quality solution is delivered to our customers. Burnishing and perfect hole sizing, used in manufacturing the pitch holes of our chains, are two of those processes.

WEBSTER BURNISHED PITCH HOLE

Burnishing is a unique cold-forming process where a graduated mandrel (punch) is used to punch the sidebar pitch holes. First, the punch pierces the sidebar material, producing a heavy tapered slug. The punch rubs the metal surface of the pitch hole with sufficient force to cause plastic flowing of the metal. This rubbing or smearing (burnishing) action of the metal fills the breakout or tapered portion of the hole that was produced during the initial piercing operation. Single punched holes, as shown in Figure 1.1 below, only allow for 15-20% bearing surface. Webster's burnished holes achieve 85-90% bearing surface, as shown in Figure 1.2. Compared to single-punched holes, burnished holes allow at least five times more surface against which the pin can rest, resulting in minimized material deformation of the hole under heavy loads.

WEBSTER PERFECT PITCH HOLE

Perfect pitch hole processing is used to give 100% press fit throughout the entire sidebar thickness. We utilize this technique for the Turbo Series chains, Sealed Joint chains, as well as some of the large steel bushed roller super capacity bucket elevator chains. First, we cut the sidebar to length, and then sub-punch the pitch holes of the chain. Secondly, the sidebars are heat treated after sub-punching. Lastly, the pitch holes are machined. This perfect hole sizing results in the press fit or bearing surface of the sidebar at 100%, as shown in Figure 1.3, below. This ensures the exact desired press fit between the bushing and/or pin and sidebar for the entire thickness of the sidebar. The perfect hole is critical to heavy duty elevator application chain life.

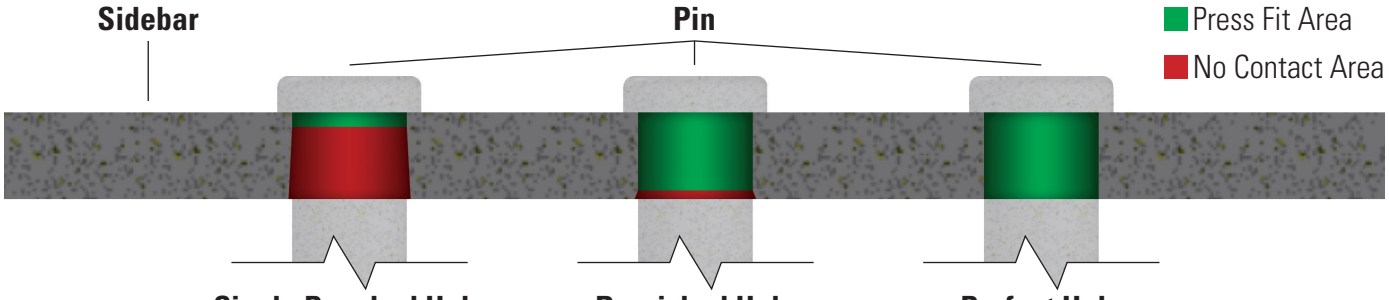

Single Punched Hole Figure 1.1 | **Burnished Hole** Figure 1.2 | **Perfect Hole** Figure 1.3

Both processes result in a high quality, tighter tolerance, fatigue resistant, work hardened sidebar holes, which are all primary keys to extended chain life. The major advantages of burnished pitch holes and perfect pitch holes are the amount of bearing surface, accuracy of hole size and consistency of press fit.

DEFINITIONS OF SYMBOLS

Symbol	Definition
▼▼	Outer sidebars 2½", inner sidebars 3¼". Can be furnished with both inside and outside sidebars of 3¼"
▼▼▼	Outer sidebars 2½", inner sidebars 3". Can be furnished with both inside and outside sidebars of 3"
▽	Outside sidebars 2¾", Inside sidebars 4", Can be furnished with both inside sidebars and outside sidebars of 4"
▽▽▽	Outside sidebars 3", Inside sidebars 4". Can be furnished with inside sidebars and outside sidebars of 4"
◗◗◗	Attachments will be located on the outer links if the attachment spacing is for an even number of pitches. Offset links must be used if attachment spacing is odd number of pitches.
✚	Attachments on outer sidebars only. Offset links must be used if attachment spacing is odd number of pitches.
ΔΔ	Weights of attachments coupled every other pitch. Cannot be coupled consecutively.
☆	Subject to Service Factor see Table 9 and Speed Factor Table 10, Section A, in Webster #400 Master Catalog
→ →	Attachments which are on one side of the chain only will be on the pinhead side unless otherwise specified. Normally furnished right-hand and left-hand.

Turbo Series Chains

Webster Industries, Inc. is proud to offer the Turbo Series (TS) heavy-duty elevator chains. Webster's chains are backed by an exclusive four year performance guarantee (See Figure 1 on Page 7). These chains have proven themselves in operation for long life and low maintenance.

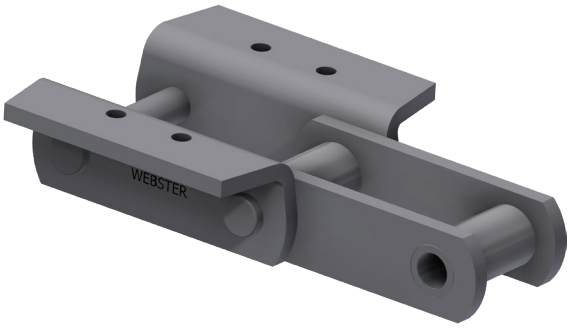

Webster's TS chains meet or exceed comparable products in hardness and case depth measurements. Full round pins and bushings have consistent press fits to provide maximum fatigue resistance. Webster's special process yields perfect pitch holes that ensure maximum interference fits. In-house heat treat processes provide balanced hardness to ensure solid core strength for toughness along with a high case depth for long wear properties. The TS chains are produced from certified sidebar quality, USA manufactured materials which use fine grain particles for ensured steel reliability.

MATERIAL

Sidebars are heat treated, medium carbon steel. Pins are alloy steel and induction hardened after through hardening. Bushings are case hardened, alloy steel to provide maximum wear resistance and chain life.

INTERCHANGEABILITY

TS chains are interchangeable with other standard makes of corresponding sizes and numbers. They are also a direct upgrade to hardened steel bushed (HSB) chains of the same number.

OPERATION

Maximum chain speed depends upon size of the sprockets. For Maximum Recommended Conveyor Speed see Table 2, Section A, in the Webster #400 Master Catalog.

ASSEMBLY

TS chains are cottered construction for the cement industry. Chain links will be alternating.

APPLICATION

TS chains are used for bucket elevators operating under highly abrasive conditions.

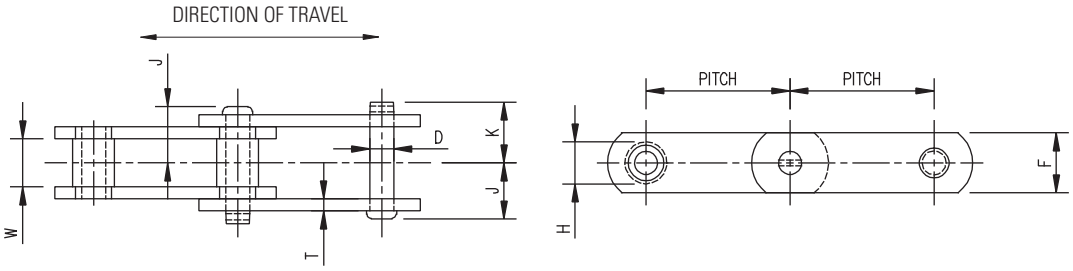

Chain No.	Average Pitch Inches	Approx. Links in 10 Feet	Average Ultimate Strength in Lbs.	Rated Working Load in Lbs.☆	Sidebars		Inside Sidebars	Overall Width		Pins	Bushings	Common Attachment Numbers
					Thk.	Height		℄ To Cotter End	℄ To Head or Rivet End	Dia.	Outside Dia.	
					T	F	W	K	J	D	H	
TS856	6.000	20	150,000	14,000	½	2½	3	3	2 27/32	1	1¾	K2M, K3M, K24M, K35M
TS956	6.000	20	150,000	14,000	½	3▼▼▼	3	3	2 27/32	1	1¾	K2M, K3M, K24M, K35M
TS857	6.000	20	150,000	14,000	½	3¼▼▼	3	3	2 27/32	1	1¾	K2M, K44
TS859	6.000	20	250,000	21,875	⅝	4▽▽▽	3¾	3 25/32	3 15/32	1¼	2⅜	K44
TS958	6.000	20	200,000	16,300	9/16	3¼▼▼	3	3 7/32	2 27/32	1⅛	2	K44
TS864	7.000	17	250,000	21,875	⅝	4▽▽▽	3¾	3 25/32	3 15/32	1¼	2⅜	K443
TS984	7.000	17	250,000	24,000	⅝	4▽	3¾	3 13/16	3½	1⅜	2½	K443

TS859/TS864 chains have shot peening on the sidebar.
TS956/TS958/TS984 chains have shot peening and lightening holes on the sidebar.

Sealed Joint (SJ) chains are designed to protect the pin and bushing from harsh chemicals, dry erosion and overall corrosion. Webster's sealed joint design is comprised of a resilient Quad Seal housed in a hardened steel ring pressed over both ends of the bushings. This seal, positioned between the inner and outer sidebars, acts as a barrier to keep conveyed material and foreign particles out of the pin/bushing interface. In addition, it helps to retain the factory installed grease between the pins and bushings to enhance chain performance and wear life.

Webster's standard SJ chains are rated up to 250 degrees Fahrenheit. Webster also offers high temperature seals for applications up to 400 degrees Fahrenheit and intermittent to 500 degrees Fahrenheit.

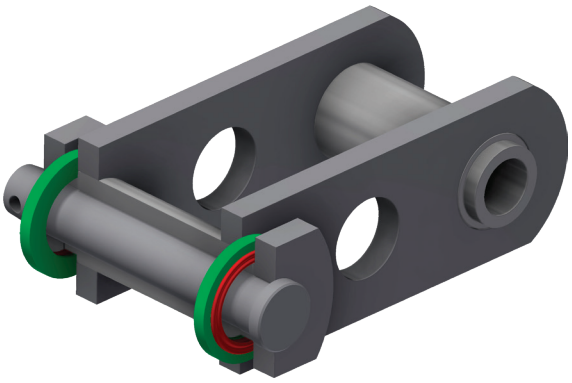

MATERIAL

Sidebars are heat treated, medium carbon steel. Pins are alloy steel and induction hardened after thru hardening. Bushings are case hardened, alloy steel to provide maximum wear resistance and chain life.

ASSEMBLY

SJ chains are cottered construction for the cement industry. Chain links will be alternating.

INTERCHANGEABILITY

SJ chains are interchangeable with other standard makes of corresponding sizes and numbers. They are also a direct upgrade to Turbo Series chains of the same number.

APPLICATION

SJ chains are used for bucket elevators when a customer is operating with a flooded boot.

OPERATION

Maximum chain speed depends upon size of the sprockets. For Maximum Recommended Conveyor Speed see Table 2, Section A, in the Webster #400 Master Catalog.

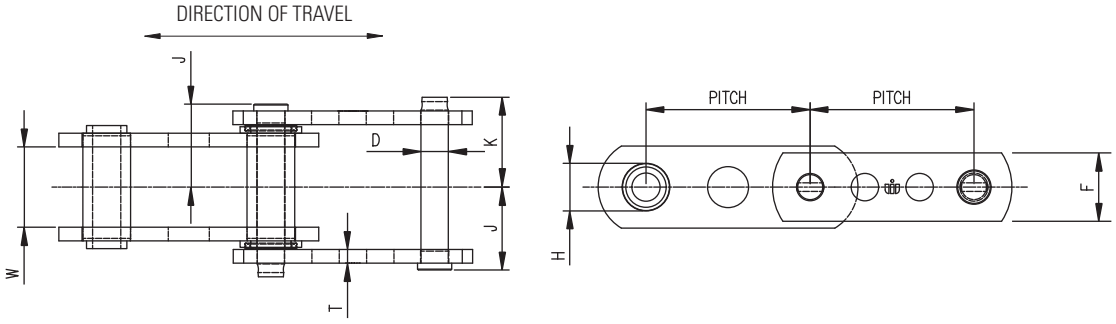

Chain No.	Average Pitch Inches	Approx. Links in 10 Feet	Average Ultimate Strength in Lbs.	Rated Working Load in Lbs.☆	Sidebars Thk. T	Sidebars Height F	Inside Sidebars W	Overall Width ℄ To Cotter End K	Overall Width ℄ To Head or Rivet End J	Pins Dia. D	Bushings Outside Dia. H	Common Attachment Numbers
SJ856	6.000	20	150,000	14,000	½	2½	3	3 9/32	3 1/32	1	1¾	K2M, K3M, K24M, K35M
SJ956	6.000	20	150,000	14,000	½	3▼▼▼	3	3 9/32	3 1/32	1	1¾	K2M, K3M, K24M, K35M
SJ857	6.000	20	150,000	14,000	½	3¼▼▼	3	3 9/32	3 1/32	1	1¾	K2M, K44
SJ859	6.000	20	250,000	21,875	⅝	4▽▽▽	3¾	4 1/16	3¾	1¼	2⅜	K44
SJ958	6.000	20	200,000	16,300	9/16	3¼▼▼	3	3½	3⅛	1⅛	2	K44
SJ864	7.000	17	250,000	21,875	⅝	4▽▽▽	3¾	4 1/16	3¾	1¼	2⅜	K443
SJ984	7.000	17	250,000	24,000	⅝	4▽	3¾	4 1/16	3¾	1⅜	2½	K443

SJ859/SJ864 chains have shot peening on the sidebar.
SJ956/SJ958/SJ984 chains have shot peening and lightening holes on the sidebar.

K2M

Chain No.	A	B	C	D	E	F Max.	T	Weight Per Foot-Lbs. ΔΔ	Bolt Size
TS856	3 5/32	1 7/8	1 7/8	2 1/4	7 1/2	4 3/4	1/2	22.0	1/2
TS857	3 13/16	1 5/8	2 1/2	2 3/4	7 1/4	4 5/8	1/2	21.5	5/8
TS956	3 5/32	1 7/8	1 7/8	2 1/4	7 1/2	4 3/4	1/2	23.1	1/2
SJ856	3 5/32	1 7/8	1 7/8	2 1/4	7 1/2	4 31/32	1/2	22.7	1/2
SJ857	3 13/16	1 5/8	2 1/2	2 3/4	7 1/4	4 7/8	1/2	22.2	5/8
SJ956	3 5/32	1 7/8	1 7/8	2 1/4	7 1/2	4 31/32	1/2	23.8	1/2

K24M+

TS856	3 5/8	1 3/4	1 7/8	2 1/2	7 1/2	4 3/4	1/2	22.0	5/8
TS956	3 5/8	1 3/4	1 7/8	2 1/2	7 1/2	4 3/4	1/2	23.1	5/8
SJ856	3 5/8	1 3/4	1 7/8	2 1/2	7 1/2	4 31/32	1/2	22.7	5/8
SJ956	3 5/8	1 3/4	1 7/8	2 1/2	7 1/2	4 31/32	1/2	23.8	5/8

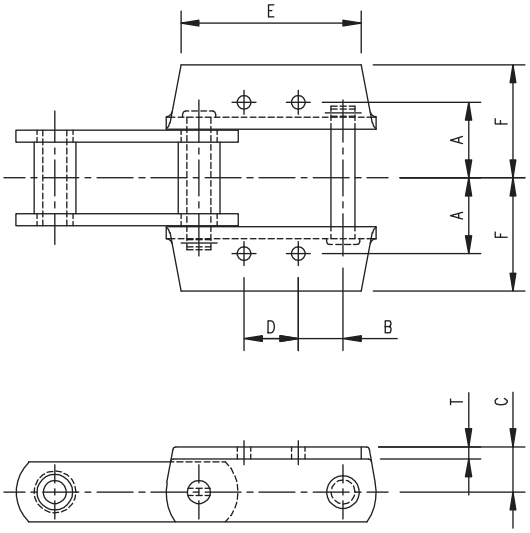

K2M and K24M

K3M+

Chain No.	A	B	C	D	E	F Max.	G	J	T	Weight Per Foot-Lbs. ΔΔ	Bolt Size
TS856	3 9/32	3	1 7/8	5 15/32	6 3/4	6 3/4	1 3/8	6 1/32	1/2	26.5	1/2
TS956	3 9/32	3	1 7/8	5 15/32	6 3/4	6 3/4	1 3/8	6 1/32	1/2	27.6	1/2
SJ856	3 9/32	3	1 7/8	5 15/32	6 3/4	6 31/32	1 3/8	6 1/32	1/2	27.2	1/2
SJ956	3 9/32	3	1 7/8	5 15/32	6 3/4	6 31/32	1 3/8	6 1/32	1/2	28.3	1/2

K35M+

TS856	3 5/8	3	1 7/8	5 7/8	6 3/4	6 3/4	1 1/4	5 7/8	1/2	26.5	5/8
TS956	3 5/8	3	1 7/8	5 7/8	6 3/4	6 3/4	1 1/4	5 7/8	1/2	27.6	5/8
SJ856	3 5/8	3	1 7/8	5 7/8	6 3/4	7	1 1/4	5 7/8	1/2	27.2	5/8
SJ956	3 5/8	3	1 7/8	5 7/8	6 3/4	7	1 1/4	5 7/8	1/2	28.3	5/8

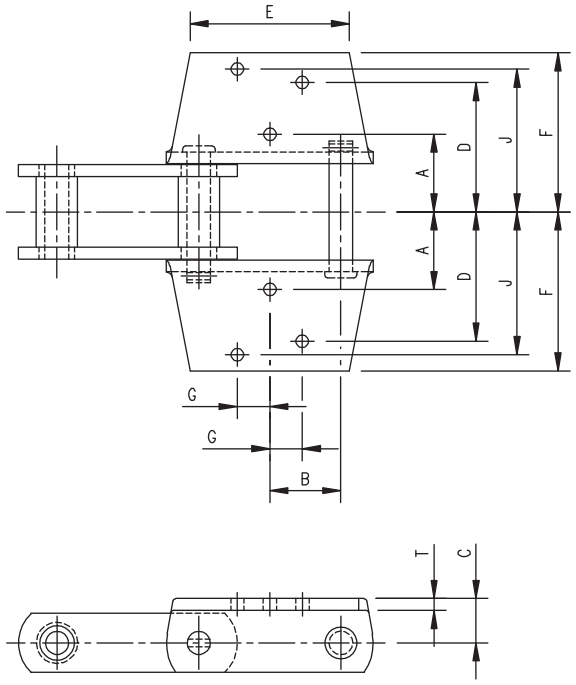

K3M and K35M

K44+ (8 Holes, no center hole in outside rows)

Chain No.	A	B	C	D	E	F Max.	G	J	K	T	Weight Per Foot-Lbs. ΔΔ	Bolt Size
TS857	3½	3½	2½	6	6½	7	3½	1¼	1¼	½	32.0	½
TS859	4½	4½	3	6½	7¼	7¼	2¾	1⅝	¾	⅝	48.0	⅝
TS958	3½	3½	2½	6	6⅝	7	3½	1¼	1¼	½	32.0	½
SJ857	3½	3½	2½	6	6⅝	7	3½	1¼	1¼	½	32.7	½
SJ859	4½	4½	3	6½	7⅛	7⅞	2¾	1⅝	1⅝	⅝	48.7	½
SJ958	3½	3½	2½	6	6⅝	7 1/16	3½	1¼	1¼	½	33.8	½

K443+ (10 Holes)

TS864	4½	5½	3	6½	8¼	7¼	3¾	1⅝	¾	⅝	46.0	⅝
TS984	4½	5½	3	6½	8¼	7¼	3¾	1⅝	¾	⅝	48.0	⅝
SJ864	4½	5½	3	6½	8¼	7½	3¾	2¼	2¼	⅝	46.7	⅝
SJ984	4½	5½	3	6½	8¼	7½	3¾	2¼	2¼	⅝	48.7	⅝

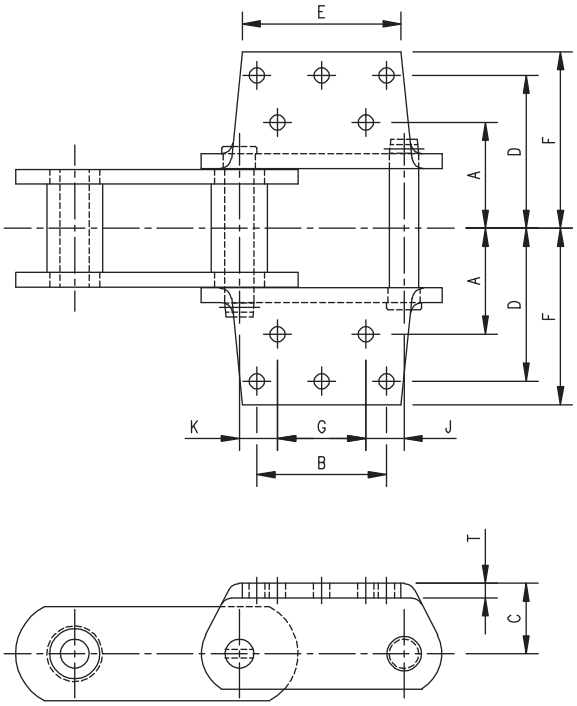

K44 and K443

TURBO SERIES CHAINS BACKED BY
FOUR YEAR PERFORMANCE GUARANTEE

Webster Industries, Inc. guarantees the Turbo Series cement chains when properly installed, maintained and applied, without alteration, in a cement mill bucket elevator, will not fail because of any defect in material or workmanship for four (4) years. In the event of any failure, the chain or defective part, at Webster's option, will be replaced, in accordance with the following schedule:

1st Year – Chain or Part Replaced at No Charge
2nd Year – Chain or Part Replaced at 40% of Original Price
3rd Year – Chain or Part Replaced at 70% of Original Price
4th Year – Chain or Part Replaced at 90% of Original Price

Remedy under this guarantee is between the user and Webster and no other person. Webster's liability is limited to the replacement of the defective product and the user waives all other remedies, including but not limited to all rights to consequential, special or accidental damages, including but not limited to damages resulting from personal injury, death or damage to or loss of use of property. This guarantee commences upon date of shipment.

SELLER MAKES NO OTHER WARRANTY OF ANY KIND WHATEVER, EXPRESS OR IMPLIED.
ALL IMPLIED WARRANTIES OF MERCHANTABILITY AND FITNESS FOR A PARTICULAR PURPOSE ARE HEREBY DISCLAIMED BY THE SELLER AND EXCLUDED FROM THIS AGREEMENT.

Figure 1

SBR/Super Capacity Bucket Elevator Chains

Steel bushed roller (SBR) chains are used for elevator applications, and are commonly called super-capacity or high-load chains. SBR chains are normally used for dual-strand bucket elevators. They are the appropriate selection for long life and heavy-duty service where difficult operating conditions prevail. Rollers are available in various designs and materials for different application requirements.

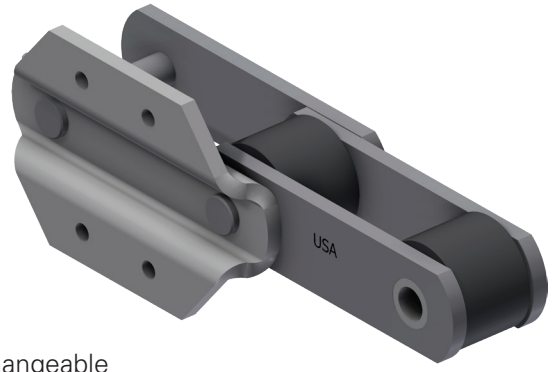

MATERIAL

Sidebars are heat treated, medium carbon steel. Pins are alloy steel, through hardened and induction hardened to provide maximum toughness, excellent wear resistance and a flexible inner core to deliver the ultimate chain life. Bushings are case hardened to provide maximum wear resistance and chain life.

ASSEMBLY

SBR chains for elevators are normally furnished in cottered construction.

INTERCHANGEABILITY

SBR chains are interchangeable with other standard makes of corresponding sizes and numbers.

APPLICATION

SBR chains are used in bucket elevator applications where difficult operating conditions prevail. The roller provides a lower operating friction to help increase chain life, decrease Rated Working Load requirements, and reduce conveyor design requirements.

OPERATION

SBR chains are indicated for slow- or moderate-speed applications. Maximum chain speed depends upon size of sprockets. For Maximum Recommended Conveyor Speed see Table 2, Section A, in the Webster #400 Master Catalog.

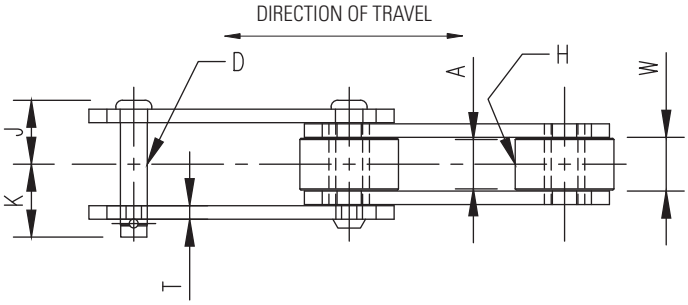

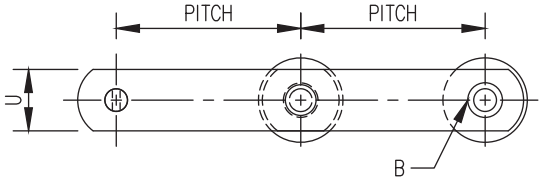

Chain No.	Average Pitch Inches	Approx. Links in 10 Feet	Average Ultimate Strength in Lbs.	Rated Working Load in Lbs.☆	Sidebars Thk. T	Sidebars Height U	Width Between Sidebars W	Overall Width ℄ To Cotter End K	Overall Width ℄ To Head or Rivet End J	Pins Dia. D	Bushings Outside Dia. B	Rollers Tread Dia. H	Rollers Tread Width A	Common Attachment Numbers
S4009	9.000	13⅓	81,200	9,200	⅜	2½	2¼	2 15/32	2 3/16	⅞	1¼	3	2 1/16	G5
S4004	9.000	13⅓	85,000	12,700	½	2½	2⅝	2 27/32	2 21/32	1	1½	3	2 7/16	G5, G6
S4065	9.000	13⅓	150,000	18,900	⅝	3½	3 1/16	3 7/16	3⅛	1¼	2	4¼	2 15/16	G5, G6
S4037	9.000	13⅓	253,000	27,000	⅝	4	3¼	3 17/32	3 7/32	1½	2⅜	4½	3⅛	G6
S4251	12.000	10	90,000	9,000	½	2	1 15/16	2½	2¼	⅞	1¼	1¾	11 3/16	G117/118

G5 → →

Chain No.	A	B	C	D	E	F	T	Weight Per Foot-Lbs. ΔΔ	Bolt Size
S4009	3 11/32	2½	1¼	14	16½	3¾	⅜	15.3	⅝
S4004	3 11/32	2½	1¼	14	16½	3¾	½	19.7	⅝
S4065A	3 15/16	2½	1¾	14	16½	3¾	⅝	40.0	⅝

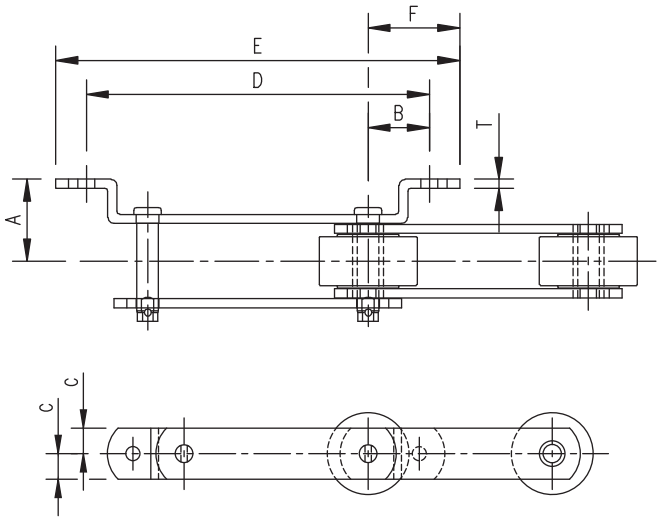

G5

G6 → →

Chain No.	A	B	C	D	E	F	T	Weight Per Foot-Lbs. ΔΔ	Bolt Size
S4004	3 11/32	2¾	3	3½	4¼	5¾	½	24.2	⅝
S4065	3 15/16	2¾	3	3½	4¼	7	⅝	44.7	⅝
S4037	3 29/32	1½	3	6	4¼	7	⅝	54.2	¾

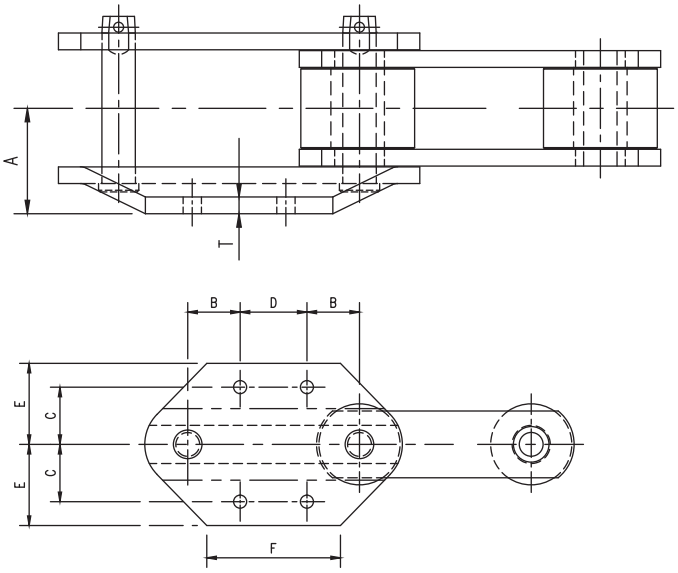

G6

G117

Chain No.	A	B	C	D	E	F	T	Weight Per Foot-Lbs. ΔΔ	Bolt Size
S1251	2	3	1	4	5	2	½	12.0	½
S4251	2	3	1	4	5	2	½	12.0	½

G118

S4251	2	3	1	4	5	2	½	12.0	¾

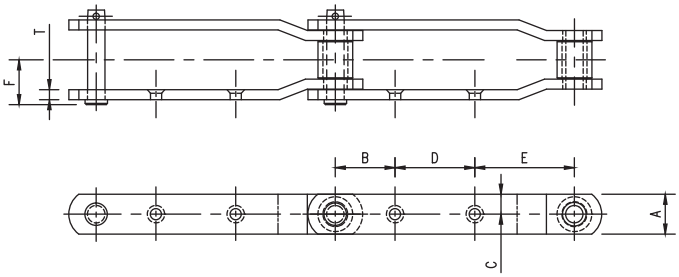

G117 and G118

Welded Steel Clinker Chains

Welded steel clinker chains are designed for applications where severe abrasion and/or high temperatures exist. The sliding surfaces are hardface welded for additional wear resistance. Sidebars and wings are made from square edge bar for better scraping action and increased conveying capacity. Webster offers 10"-30" wide attachments with hardfacing. Special attachments are available upon request.

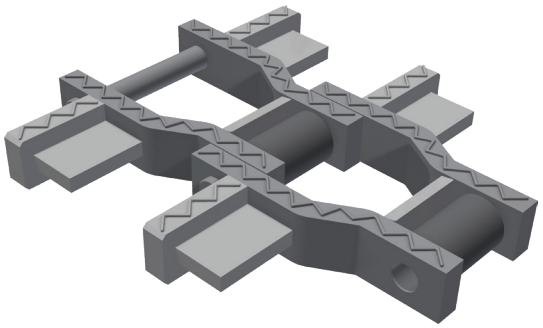

MATERIAL

Sidebars and barrels are medium carbon heat treated steel. Pins are medium carbon alloy steel, through hardened and induction hardened to provide maximum toughness, excellent wear resistance and a flexible inner core to deliver ultimate life. Wings are unheat treated medium carbon steel.

ASSEMBLY

Welded steel clinker chains are normally furnished in cottered construction.

INTERCHANGEABILITY

Welded steel clinker chains are interchangeable with other standard makes of corresponding sizes and numbers.

APPLICATION

Welded steel clinker chains are typically used in the cement industry in cold or hot drag conveyors. However, they are also ideal for other applications where extreme abrasion and heat resistance are required. These chains provide long life with very low maintenance requirements.

OPERATION

Maximum chain speed depends upon size of sprockets. For Maximum Recommended Conveyor Speed see Table 2, Section A, in the Webster #400 Master Catalog.

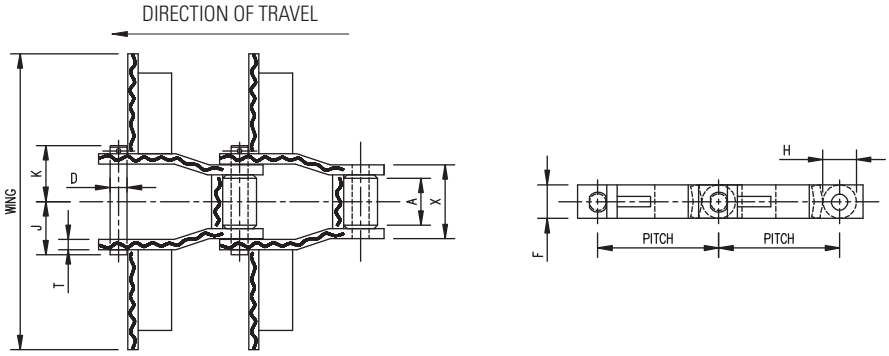

Chain No.	Average Pitch Inches	Approx. Links in 10 Feet	Average Weight Per Ft. Lbs. Plain Chain	Average Ultimate Strength in Lbs.	Rated Working Load in Lbs.☆	General Dimensions		
						Length of Bearing	℄ To Cotter End	℄ To Head or Rivet End
						X	K	J
WHX5157HF	6.050	20	28.5	117,000	18,200	4⅝	3⅝	3⅜
WHX6067HF	9.000	13⅓	28.0	195,000	24,000	5½	4 3/16	3 15/16
WHX6121HF	9.000	13⅓	37.0	205,000	27,600	6 5/16	4 31/32	4 23/32
WHX5121HF	9.000	13⅓	37.0	205,000	27,600	6 5/16	4 31/32	4 23/32

Chain No.	Pins		Sidebars		Barrels	Max. Spkt. Width	Common Attachment Numbers
	Dia.		Thk.	Height	Outside Dia.		
	D	Style	T	F	H	A	
WHX5157HF	1⅛	F	⅝	2½	2½	2½	WING
WHX6067HF	1¼	F	¾	2½	2½	3¼	WING
WHX6121HF	1¼	F	1⅛	2½	2½	3¼	WING
WHX5121HF	1¼	F	1⅛	2½	2½	3¼	WING

WHX5121HF runs closed end forward. Attachments available up to 30" overall width

STACKER & RECLAIMER SYSTEMS

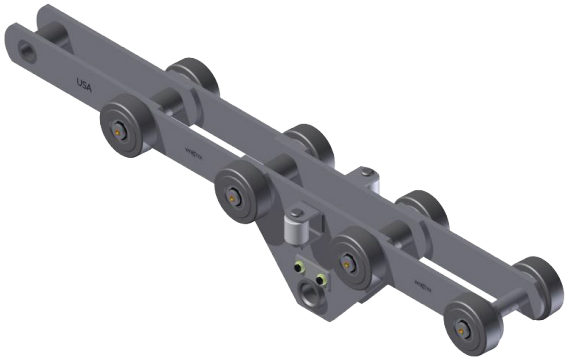

Webster has a long history of manufacturing chains used in heavy-duty stackers and reclaimers. Stackers and reclaimers are manufactured by Original Equipment Manufacturers (OEM) located throughout the world. Due to the vast amount of designs and applications, there is no industry standard for the design or the manufacture of these chains. This leads to a variety of applications, and the OEM is the only option for replacement components.

Webster takes great pride in having the ability to dimensionally replace most any manufacturer's chains. This value added service allows the customer to have a bolt to bolt, drop-in replacement chain. Webster's engineers will take the time to review the original chains wear life and types of failures experienced during the product cycle. Based on the information provided by the end-user, a superior replacement chain will be manufactured to improve the chains life in the application.

Webster's goal is to always understand the past, so that we can manufacture a better, long-lasting product. Ultimately, generating more up-time and saving the customer both time and money

FLOATING ATTACHMENT STYLE BUCKET ELEVATOR CHAINS

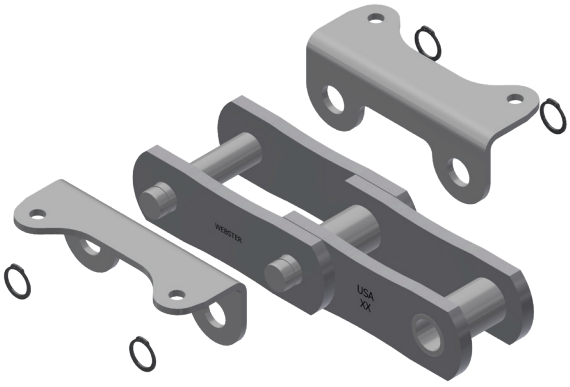

Webster has the unique capability to retrofit most competitive, existing metric size floating attachment, central bucket elevator chains. Our chains are designed to fit into the existing OEM application, allowing the end user to utilize the same bucket punch hole sizes and locations, as well as run on the same traction wheels or sprockets. Webster uses the same special features found in our Turbo Series chains, shot peening and perfect hole processing, and applies these upgrades to our floating attachment design.

Webster's chain is the same form, fit and function made with domestic US steel and Made in the USA quality, thus eliminating any long lead-times from overseas, inferior materials or manufacturing processes.

Fabricated Steel Elevator Buckets

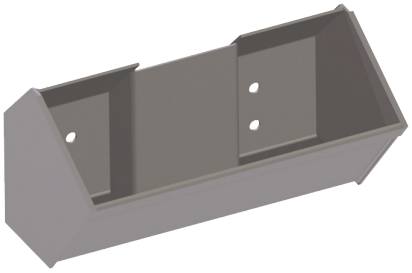

STYLE ACS

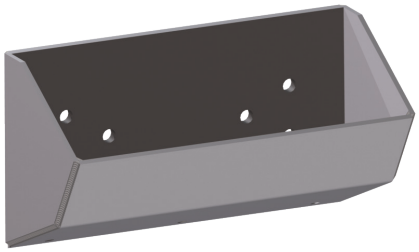

STYLE HC

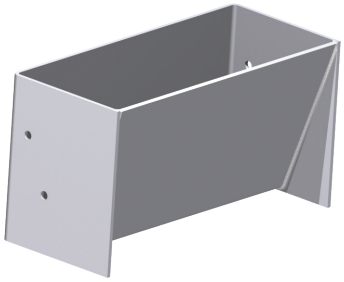

SUPER CAPACITY STYLE

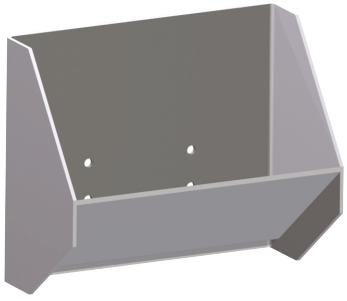

CONTINUOUS STYLE

Webster's modern manufacturing methods and technical expertise ensure quality, repetition and speed of production for fabricated steel buckets to the application required.

Steel elevator buckets are laser cut from plates and robotically welded in our fabrication department to ensure quality manufacturing and a precise match with the mating chain attachment.

Steel elevator buckets are available in a variety of material with numerous options such as hardface welding or wear lips to resist abrasion. Steel elevator buckets are available for nearly any application.

The most common steel elevator buckets include:

STYLE ACS steel elevator buckets are designed for high capacity when handling free-flowing fine materials. Welded steel buckets feature a wraparound design with much of the load in dual compartments. The recessed back, for chain mounting, provides additional strength and durability.

STYLE HC steel elevator buckets are designed primarily for handling cement and other free-flowing materials in centrifugal discharge elevators operating at higher than normal speeds. These buckets are welded construction and made of heavy gauge steel.

SUPER CAPACITY STYLE steel elevator buckets are designed to handle greater capacities and larger lumps than ordinary continuous style buckets. These buckets are mounted between two strands of chain with the back of the buckets extending beyond the chain centerline. This results in greater carrying capacity. These buckets are made in two styles: Vertical Regular and Vertical Overlapping.

CONTINUOUS STYLE steel elevator buckets are used for handling gritty or bulky materials such as sand, stone, gravel, coal and ore at slow speeds or light, pulverized, free-flowing fine materials which will not discharge properly at higher speeds. The flanged front forms a chute for the clean discharge from each succeeding bucket.

STYLE AC

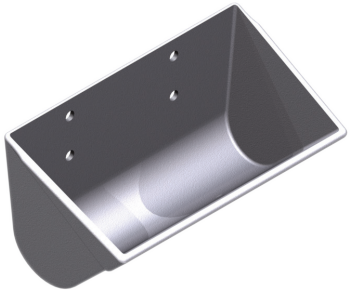

STYLE AA

Modern methods, technical experience, research and careful laboratory control of metals ensure quality, repetition and speed of production for malleable iron buckets which resist abrasive wear, rust and corrosion. They are furnished in both malleable iron and Duramel for better wear.

The most common cast elevator buckets include:

STYLE AC cast elevator buckets provide fast, thorough discharge of cement, lime and other dry or free-flowing fine materials. Vent holes in the bottom of each bucket release air trapped in filling and allow material to empty from bucket quickly and completely on discharge.

STYLE AA cast elevator buckets are used for handling heavy, abrasive products. These buckets feature a heavy reinforcing band for digging that is cast along the front edge and corners to prevent distortion, and increased wear.

WEBSTER INDUSTRIES ASSEMBLY PROGRAM

Customers that want to save time and money utilize Webster Industries chain and bucket assembly program. Webster offers chain and buckets assembled in 10 foot sections. The buckets can be assembled to the chain either by Huck-Style fasteners, Grade 5 or Grade 8 bolts.

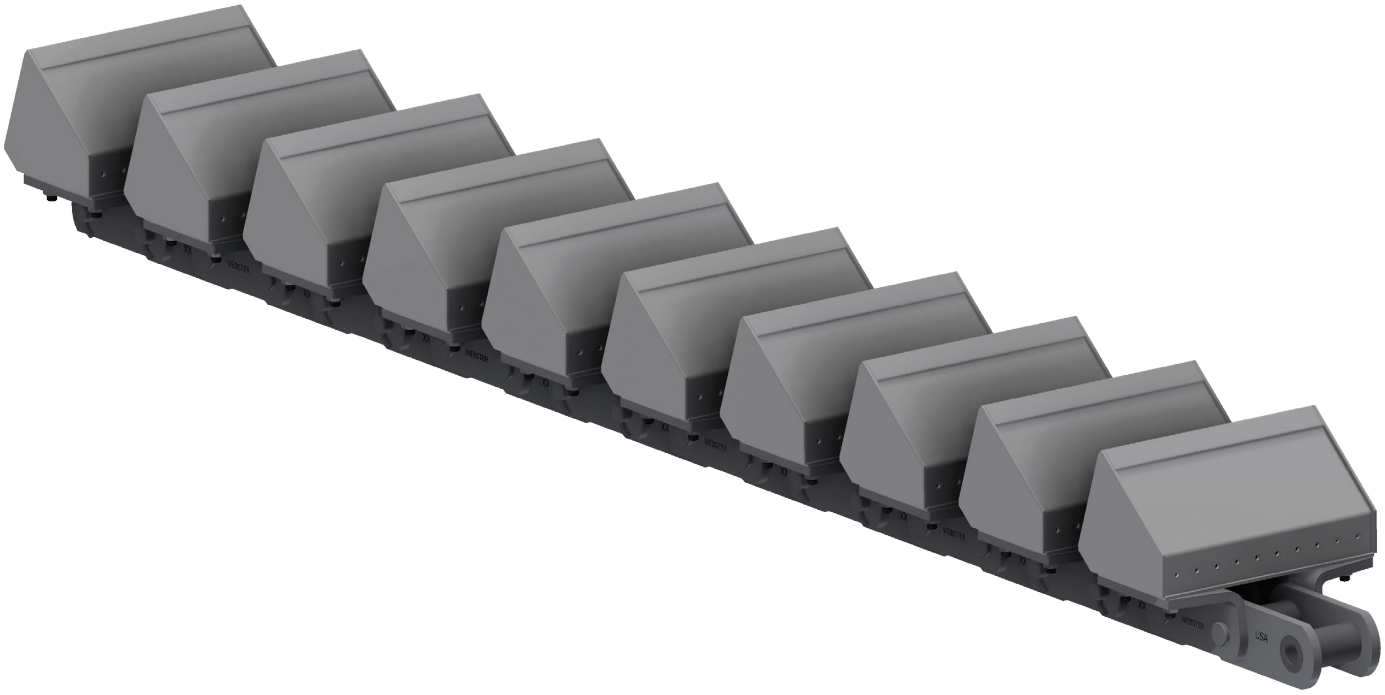

Apron Conveyors

Apron conveyors are engineered to handle a variety of materials ranging from hot and abrasive to dry and fine. Pans are designed to absorb the impact of large lumps, repeated loading and inclined conveying with minimum spillage or breakage, cleaner discharge and more durable continuous service.

In addition to the designs shown in this catalog, Webster apron conveyors are available with modifications to these standard designs, in total custom designs and as replacements for aprons from other manufacturers.

MATERIAL

Pans are mild steel. Sidebars are medium carbon steel. Pins are through hardened, alloy steel for even more wear resistance. Sidebars and pins can be furnished with additional heat treatment on request. Bushings are furnished in case hardened steel to provide maximum wear resistance and chain life. Rollers are furnished in WEBLOY and provide a grease reservoir and lubrication fittings when internal greasing is required.

ASSEMBLY

Apron conveyor chains are cottered construction.

INTERCHANGEABILITY

Apron conveyors are interchangeable with other standard makes of corresponding sizes and numbers. Webster can reverse engineer OEM replacement chains for clinker pan conveyors, apron feeder conveyors and apron conveyors.

APPLICATION

Aprons are used in conveyors and feeders where the most difficult operating conditions prevail. The rollers provide lower operating friction which helps to increase chain life and reduce conveyor design requirements.

OPERATION

Apron conveyors are best suited for slow or moderate speed applications. Maximum chain speed depends upon size of sprockets. For Maximum Recommended Conveyor Speed see Table 2, Section A, in the Webster #400 Master Catalog.

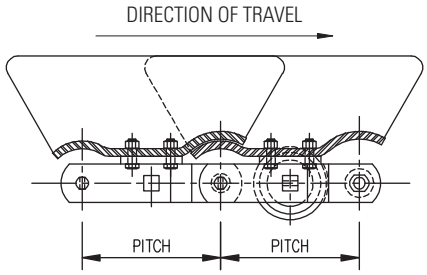

STYLE A

The double beaded leakproof pans are recommended for fine or hot materials. The design of the pan holds fine or dry materials until they are discharged. Because the chains are mounted underneath with independent outboard rollers, hot materials can be easily handled.

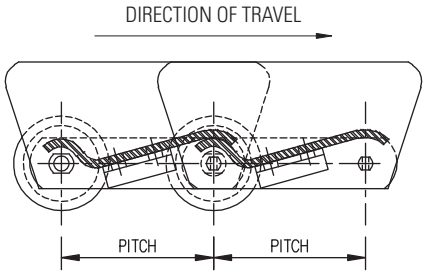

STYLE B

The single beaded pans are a natural for inclined conveyors. The shape of the pan allows for cleaner discharge at the head end and minimizes breakage of fragile materials.

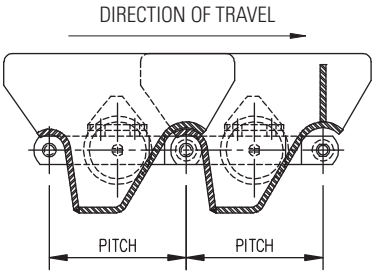

STYLE C

The deep leakproof pan allows fine or hot materials to be carried at steeper inclines and higher capacities.

Bucket Elevator Elongation Chart

CHAIN	PITCH (INCHES)	RECOMMENDED PITCHES OF CHAIN TO MEASURE	CHAIN MEASUREMENT WHEN NEW (INCHES)	PERCENTAGE OF MAXIMUM ELONGATION
HSB102B	4.00	30	120.0	3.00%
HSB111	4.76	26	123.8	3.00%
HSB110	6.00	20	120.0	3.00%
HSB833	6.00	20	120.0	3.00%
TS856	6.00	20	120.0	3.00%
TS857	6.00	20	120.0	3.00%
TS859	6.00	20	120.0	3.00%
TS956	6.00	20	120.0	3.00%
TS958	6.00	20	120.0	3.00%
TS864	7.00	18	126.0	3.00%
TS984	7.00	18	126.0	3.00%
S4004	9.00	14	126.0	2.00%
S4065	9.00	14	126.0	2.00%
S4037	9.00	14	126.0	2.00%

Aggregate

Fertilizer

Limestone

Potash

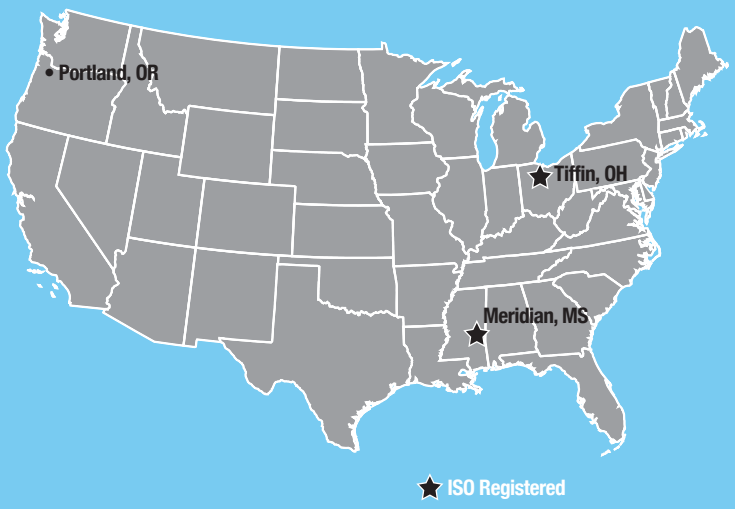

Coal

Cement

Mining

MADE in the USA

Certified System ISO 9001 DNV·GL Global

GEAPS

MPTA

PTRA

EPTDA

PTDA Member

MEMBER CEMA CONVEYOR EQUIPMENT MANUFACTURERS ASSOCIATION

NATIONAL ASSOCIATION OF Manufacturers PROUD MEMBER 2017

ISO Registered

800-243-9327 • websterchain.com

No. HI -04/18
Printed in the USA-MLAD/1M